Door handle - Brushed Platinum

11 000 980

Brushed Platinum	11 000 980-06
Chrome	11 000 980-00
Matte Black	11 000 980-33

Required miscellaneous

Attachment set for towel bar/tumbler mounting on one side - 12 350 970 90

●for installation on glass tiles

Required miscellaneous

Attachment set for towel bar/tumbler mounting on two sides - 12 351 970 90

Door handle - Brushed Platinum

11 000 980

mm [inches]

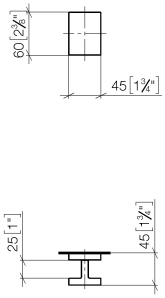

Door handle - Brushed Platinum

11 000 980

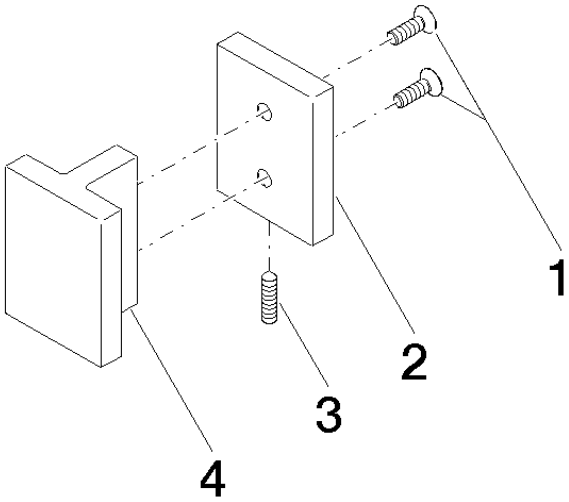

Spare parts list

No.	Item Number	Name	Quantity used	Delivery time
1	09 30 30 170 90	screw	2	2
2	08 17 98 557-06	cover	1	10
3	04 31 11 113 00 90	pin	1	2
4	08 17 98 558-06	handle	1	10

We reserve the right to change designs, product range and technical specifications without prior notice.
More information can be found at: www.dornbracht.com +49 (0) 2371 8899 900 mail@dornbracht.com